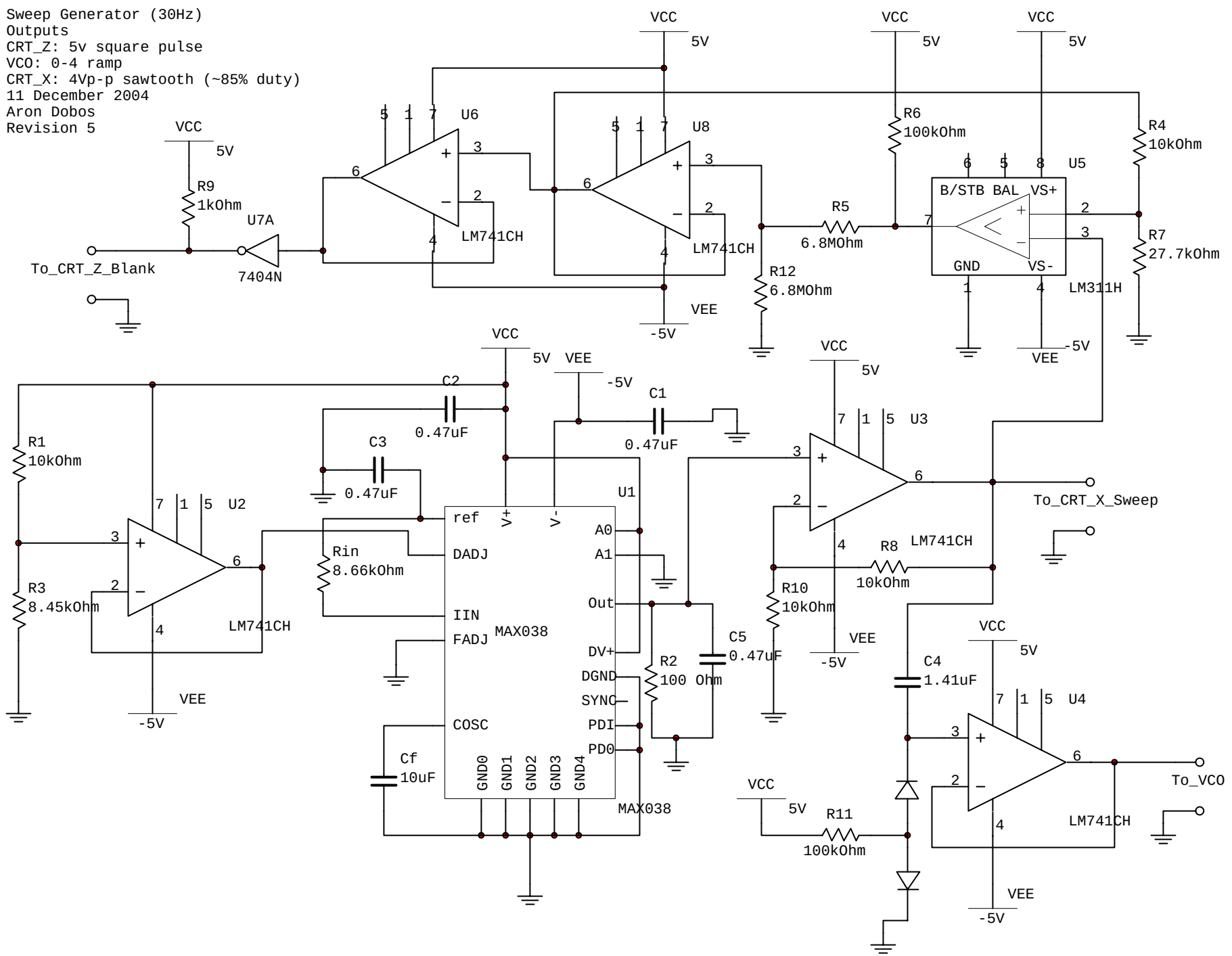Sweep Generator (30Hz)
Outputs
CRT_Z: 5v square pulse
VCO: 0-4 ramp
CRT_X: 4Vp-p sawtooth (~85% duty)
11 December 2004
Aron Dobos
Revision 5